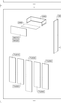
C
C
C

Ø8 x 100g
3000
3000
3000

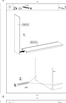
Ø8 x 100g
3000
3000
2
100

Ø8 x 100g
Ø8 x 100g
3000
3000
3000

Ø8 x 100g
3000
3000

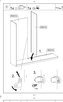
3x
3x
3x
3x
2000
2000
2000
2000
OK
OK

3x
3x
3x
3x
2000
2000
2000
2000
OK
OK

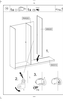
3x
3x
3x
3x
2000
2000
2000
2000
OK
OK

3x
3x
3x
3x
2000
2000
2000
2000
OK
OK

2x ø 10mm
2x
2x
2x

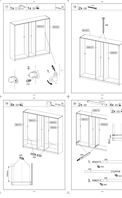
1x
1x
1x

29 in
29 in
29 in
29 in
Screw 1
Screw 2
Screw 3

29 in
29 in

29 in
29 in

29 in
29 in

29 in
29 in

29 in
29 in

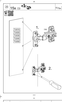
19
1x
1x
1x

1
2
3
4
5
6
7
8
9
10
11
12
13
14
15
16
17
18
19
20
21
22
23
24
25
26
27
28
29
30
31
32
33
34
35
36
37
38
39
40
41

MZ110_04

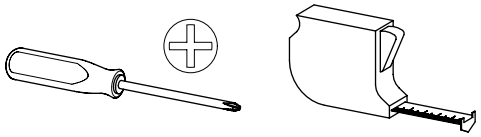

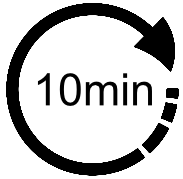

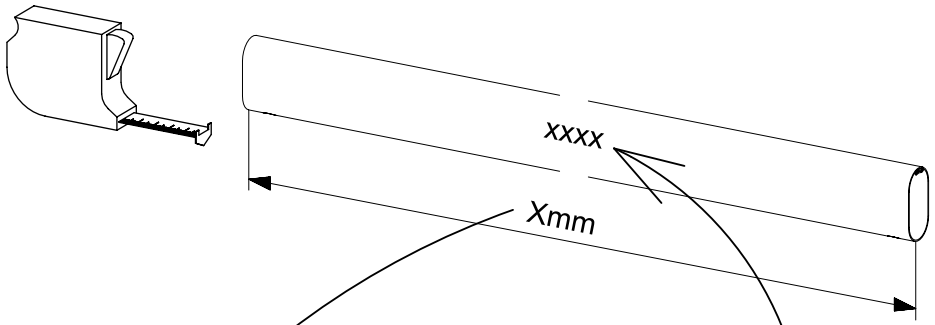

Xmm		xxxx
393mm	max. 40kg	2000
426mm	max. 40kg	2001
538mm	max. 40kg	2011
563mm	max. 40kg	2002
650mm	max. 40kg	2003
809mm	max. 40kg	2004
873mm	max. 40kg	2006
890mm	max. 40kg	2010
1097mm	max. 40kg	2008

xxxx = 2000, 2001, 2002, 2003, 2004, 2006, 2008, 2010, 2011,

1

2x 205 3,5x15

2x 279

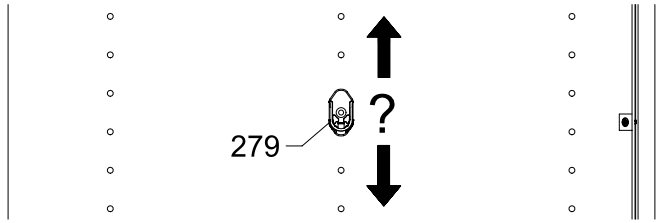

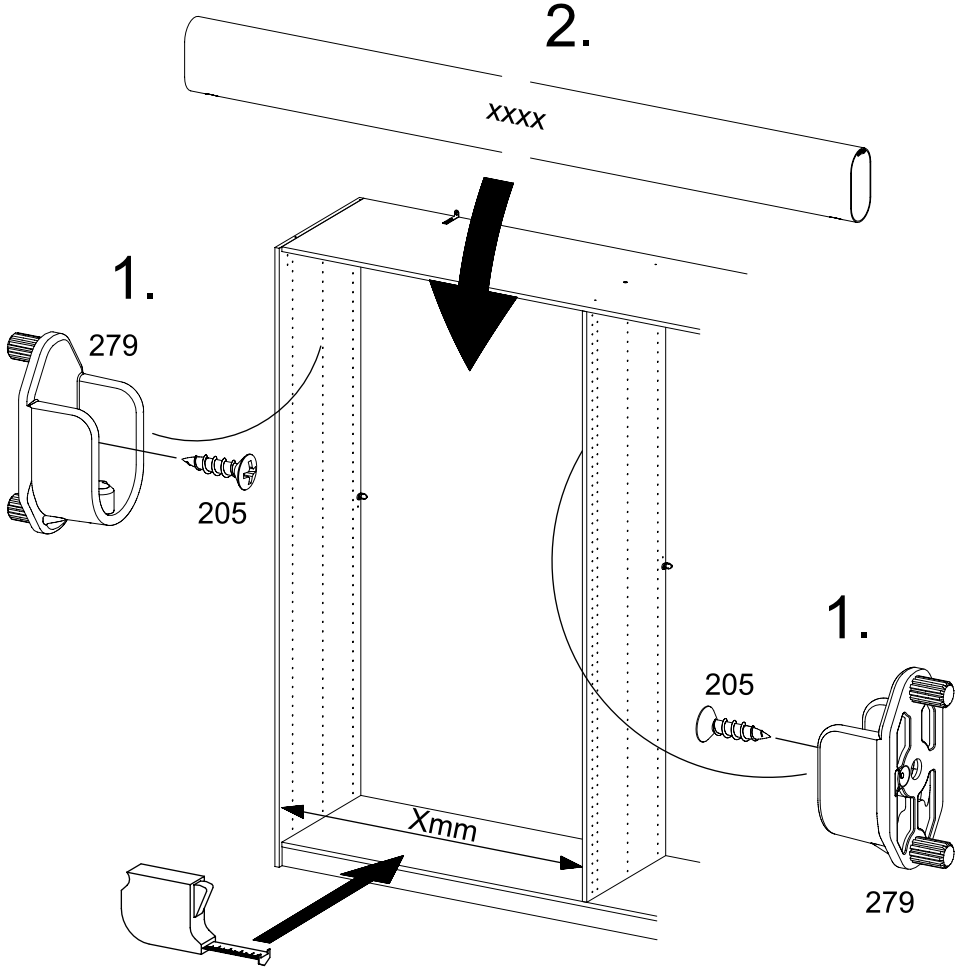

MZ112_05

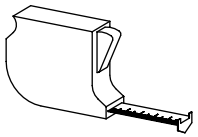

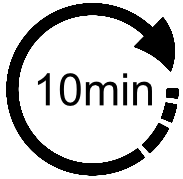

Xmm	Ymm	Zmm		xxxx
432mm	450mm	16mm	max. 10kg	2143
632mm	450mm	16mm	max. 10kg	2164
656mm	450mm	16mm	max. 10kg	2145
848mm	450mm	16mm	max. 10kg	2149
880mm	450mm	16mm	max. 10kg	2147
1064mm	450mm	22mm	max. 25kg	2150
848mm	395mm	16mm	max. 10kg	2167
632mm	395mm	16mm	max. 10kg	2169

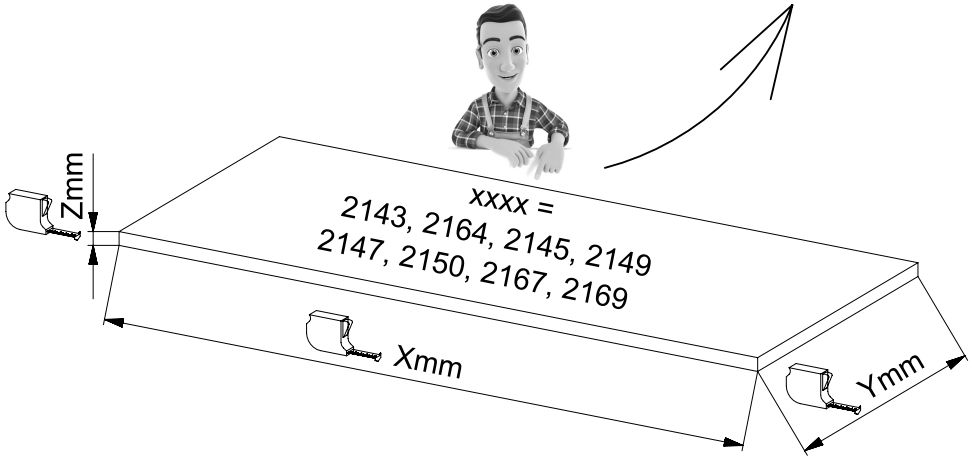

1

4x 1105

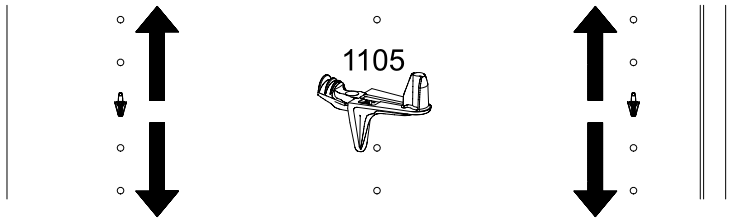

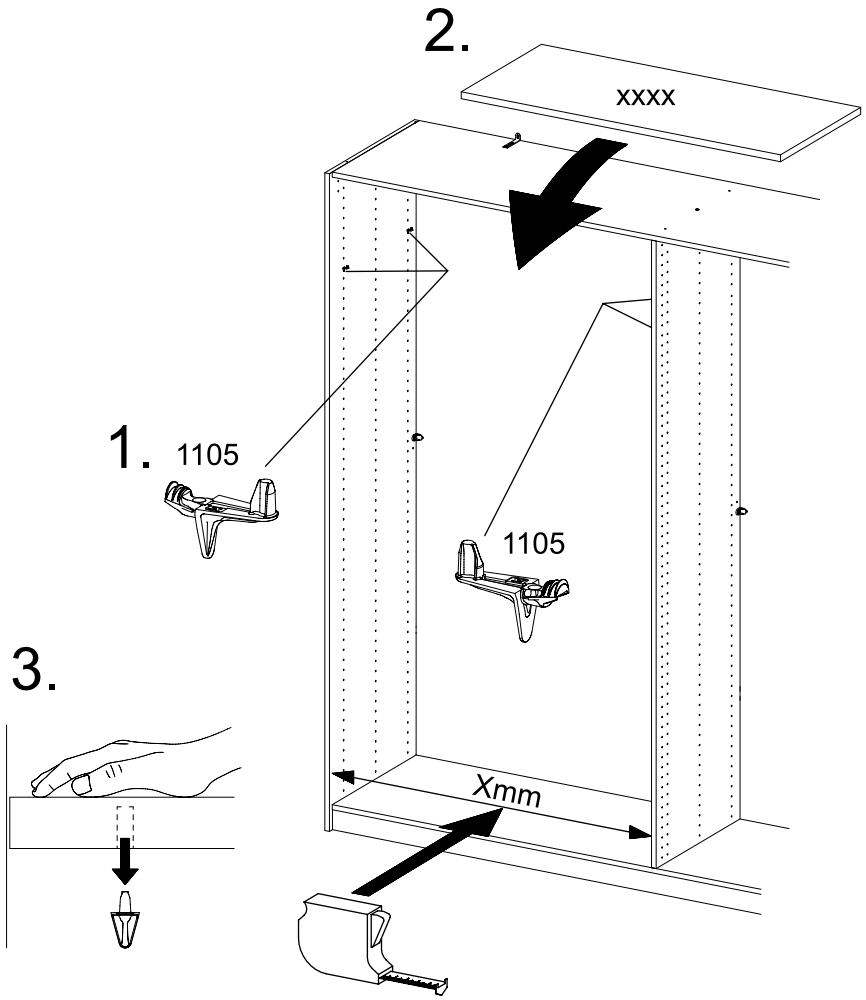
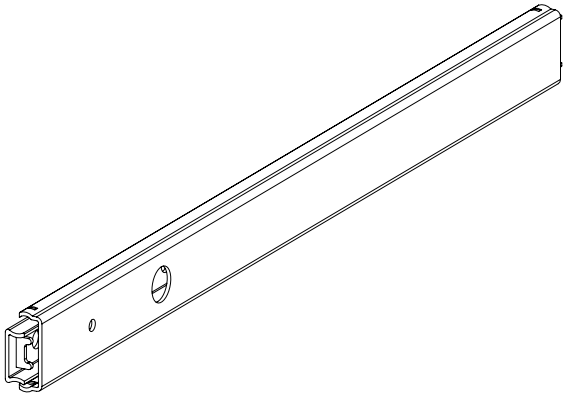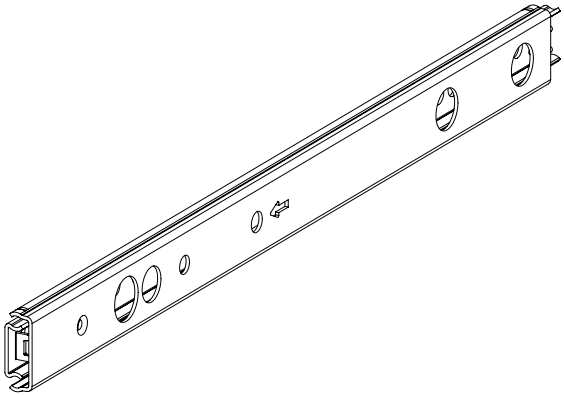
259 = 1396